Water Well Owner's Guide

Energy and Environment Cabinet
Department for Environmental Protection
Division of Water

September 8, 2009

Prepared by the:
Kentucky Division of Water
Department for Environmental Protection
200 Fair Oaks Lane
Frankfort, KY 40601
Phone 1-(502)-564-3410

September 8, 2009 version

The Energy and Environment Cabinet does not discriminate on the basis of race, color, national origin, sex, age, sexual orientation, gender identity, religion, disability, ancestry or veteran's status and provides, on request, reasonable accommodations including auxiliary aids and services necessary to afford an individual with a disability an equal opportunity to participate in all services, programs and activities. To request materials in an alternate format, contact the Division of Water, 200 Fair Oaks Lane, Frankfort, KY 40601, (502)-564-3410. Hearing- and speech-impaired persons can contact the agency by using the Kentucky Relay Service, A toll-free telecommunication device for the deaf (TDD). For voice to TDD, call 1-800-648-6057. For TDD to voice, call 1-800-648-6056.

What is routine well disinfection?

Routine well disinfection, also called shock chlorination, is a technique that helps keep water from properly constructed wells a safe and dependable source of drinking water. It also helps reduce nuisance problems such as staining and odors.

Why should I do routine well maintenance and disinfect my well?

- Bacteria and viruses, which are accidentally introduced into a well or the plumbing and pipes of a home, can most of the time be eliminated, thus providing safer water. The bacteria that can be eliminated include the total coliform and fecal coliform bacteria, for which water supplies and health departments assess by laboratory tests.

- The odors and staining caused by iron, manganese, and sulfur can be reduced and sometimes eliminated through routine well disinfection, resulting in clearer, better tasting and more appealing water for you and your family.

- The cost of water treatment is often reduced, since iron and sulfur bacteria release iron, manganese, and hydrogen sulfide gas (rotten egg smell) as waste products. Water treatment equipment repairs and water treatment chemical usage may be lowered.

- The life of the well can be extended, reducing the possibility of costly well rehabilitation and prolonging or preventing the need for eventual well replacement. The useful life of the pump, pressure tank, and piping is also increased. Iron and sulfur bacteria can make water more acidic, resulting in corrosion of metal parts.

- Flow restrictions created by bacterial growths add to the stresses placed on the pump. The cost to pump water is reduced by minimizing bacteria slimes, which plug the aquifer and piping system. The pump doesn't have to work as hard, so electrical costs are sometimes minimized.

- Routine well inspections during regular well disinfections allow problems with a well to be found early before those problems become serious. Repairs made early cost less and help protect your water source.

- Routine well disinfection is an inexpensive process that most well owners can do themselves for a few dollars and a couple of hours of work. The disinfectant, straight chlorine laundry bleach, can be bought at the local grocery store.

What are fecal coliform bacteria?

Fecal coliform bacteria are a family of hundreds of different strains of bacteria. Most, but not all, are harmless to humans. They normally live in the intestines of humans and animals.

Fecal coliform bacteria sample collection is an inexpensive test to determine if harmful pathogens (disease-causing organisms) are likely to be present. If no fecal coliform bacteria of any type are present in a sample, it is assumed that no harmful bacteria or viruses are present.

The harmful bacteria are one of the many types of coliform bacteria that show up in a "Total Coliform Bacteria" test. A few varieties produce toxins that can cause illness. The Escherichia coli (E. Coli) 0157:H7 is a variety that has been in the news lately. It is the coliform bacterium associated with cattle manure and improperly cooked beef. The only known occurrences in wells have been associated with shallow wells near places where cattle are kept.

Chlorine, short wave ultraviolet light, boiling, and ozone all act to kill or inactivate these bacteria.

If your well water shows positive for Total Coliform, you should properly disinfect the well and distribution system and have it tested again. If the well tests positive for Total Coliform again, a chlorinator or ultraviolet light disinfection system is an option to correct the potential problem.

Fecal coliform bacteria are rare in groundwater unless there is a direct connection to the surface. Wells that become muddy or cloudy after a rain generally have a direct connection to the surface. Examples include:

- Shallow groundwater – wells less than 20 feet deep or wells that have less than 20 feet of casing
- Open wells – wells that have no cap or seal or a leaking cap or seal
- Cave streams – wells that pull water from cave streams
- Improperly sealed casing – wells that have an opening between the casing and the drill hole, which allows water to drain from the surface to the groundwater
- Hand dug wells and wells that have buried wellheads

These problem wells may require replacement or continual treatment to provide safe water.

Please note that a fecal coliform bacteria sample can be easily contaminated, sometimes producing a false positive result. For example, the well may be clean, but an indoor faucet may be contaminated with bacteria and therefore samples taken from the faucet may be contaminated. Because of this, it is preferable to collect the sample directly from the well when possible. Additionally, a sample taken for coliform bacteria must be collected properly, packed on ice and delivered to a lab within six hours of collection to ensure accuracy.

Source: Modified from data from the USEPA web site on fecal coliform bacteria.

Iron and Sulfur Bacteria

Iron and sulfur bacteria are not known to be harmful to health but are a nuisance, causing red, orange, brown, or black slimy stains; musty, or sulfur odors ("rotten egg"); and red or orange coloration of the water. The bacteria grow on small amounts of iron, manganese, and sulfur dissolved in natural groundwater and rock. They occur naturally in aquifers.

These bacteria need only a small amount of air to grow and flourish in a well bore. The agitation, aeration, and induced flow of water to the well bore by pumping can provide an environment with the small amounts of air, iron, manganese, and sulfur that allows them to flourish. The water flow from the pump can also provide a constant flow of nutrients to the iron and sulfur bacteria around the well and in the pipes, pressure tank, and water heater to allow them to grow actively.

Iron and sulfur bacteria are not assessed in a standard Total Coliform Bacteria test or Fecal Coliform test. The first indication of a developing iron and sulfur bacteria problem is the development of red, orange, brown, or black slimes in the toilet tank. Biological Activity Reaction Tests (BARTs) are available for testing for iron and sulfur bacteria in well water. These bacteria can not be eliminated, but they can be controlled through routine well and distribution system disinfection to minimize or eliminate the nuisance effects.

How can these bacterial problems be controlled?

Proper well and distribution system maintenance and routine well disinfection are the keys to controlling and preventing these problems. An inspection of the well and distribution system should occur **at least** once a year and should include:

1. Inspecting the cap or seal to make sure it's in place and secure. The vent should have a screen over the vent hole to prevent insects and rodents from entering the well. In most cases a vent is needed to help a well produce water more efficiently, but can sometimes be plugged in lower-use domestic wells with little noticeable effects. The best type of vents are the ones that allow a little air to enter from the bottom of a U tube, thus preventing things that are spilled, dumped, or dropped onto the vent from entering the well.

2. Inspecting the ground around the casing to check for slumping and settlement. Backfill slumped holes around the well casing with compacted clay soil. The land surface around the well casing should slope away from the well to prevent the ponding of surface water.

3. Make sure that things are not kept around the well that could release contaminants to the well. (A good rule of thumb is: If you're not willing to drink what could be spilled, leaked, or produced by something, it shouldn't be kept near the well.) Examples include fuel cans, fertilizer, pesticide containers, paint, dog or animal pens, gasoline- and diesel-powered tools and vehicles, and solvents.

4. Inspect the piping, wiring, and pressure tank for leaks, excess corrosion, and general condition. If you have a leak or something doesn't look right, have a certified water well driller or plumber check it out.

When should I disinfect my well and plumbing system?

Well and distribution system disinfection should be performed after any of the following occur:

- After a new well is drilled or the well is otherwise modified.
- After a pump repair or replacement.
- After the plumbing system has been newly installed, opened, drained, repaired or modified in any way. This could include repair of broken or leaking pipes, installation of a tee to a new faucet or hydrant, draining the system to prevent freezing during a trip, after an extended period of no use, or any other situation where air, dirt, or hands have touched the inside of the piping system. Failure to disinfect the piping after a repair is potentially exposing your family to pathogenic (disease-causing) organisms.
- After the well is covered by floodwaters. Wells in flood-prone areas should have well seals (with watertight gaskets) and the vent extended above the highest known flood level to minimize the possibility of floodwater entering the well. Floodwaters can introduce bacteria and other pathogenic organisms into a well.
- After you first notice signs of staining or odors from iron or sulfur bacteria. Iron and sulfur bacteria can be controlled with routine disinfection.
- At least once a year as preventive maintenance, even if no problems have been observed or no repairs to the well, pump, or distribution system have been made. Wells with iron and sulfur bacteria may require more frequent disinfection with higher chlorine levels to keep growths under control.

How Do I Disinfect or Shock Chlorinate My Well and Plumbing System?

The disinfection process generally consists of the following: adding chlorine to the well, circulating the chlorinated water back down the well, running water to each hot and cold faucet until you smell chlorine, letting the system sit for a minimum of 2 hours (overnight is preferable) and draining the chlorinated water out using an outside faucet.

Once you've shock chlorinated the well and plumbing system the first time, you'll find that it's much like cleaning out the gutters or trimming the hedges - you don't have to do it very often and all it takes is a little time and commitment. After all, you are the water plant operator of your own water system, and the condition of the water coming out of the tap depends on the way you care for your system and the maintenance you provide.

Accessing Your Well

You need to have access to the top of the well casing. If you have a well with a buried wellhead (you have to dig a hole to access the top of the well casing), you should get a certified driller to upgrade your well by installing a ***pitless adapter unit***. A pitless adapter unit allows the water pipe to exit the side of the casing below the ground surface while providing a watertight seal, which prevents bacteria and soil fauna from getting into your well (see the diagram to the left).

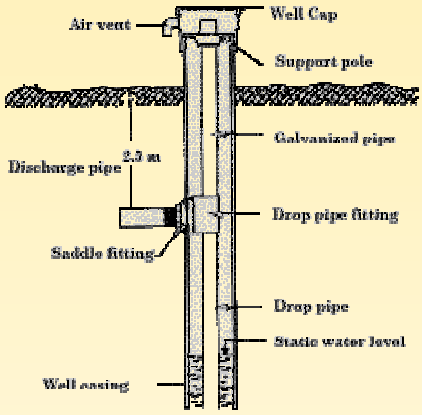

Wells with pitless units have the casing extending up above the ground surface. Wells that have pitless adapter units have a cap that sits down over the well casing (sometimes they have three small set screws on the side of the cap to secure it).

If your water pipe(s) and electrical wires come out of a metal plate on top of the well that has four bolts in it, you have what is called a ***sanitary seal*** (see figure below). Since the pump and pipe hang on a sanitary seal, it is best to not loosen the bolts and raise this unless you are confident you are able to properly replace it. Instead you can access the well through the vent pipe.

If you aren't sure which type of well cap you have, ask your certified well driller to show you how to get access to your well for routine well disinfection. Modifications to the vent can allow chlorine to be added to a well by removing a plug.

If your submersible pump wires come out of the vent hole, you may need to have the certified driller install a different sanitary seal that has a separate vent hole. See the figure to the right for more details.

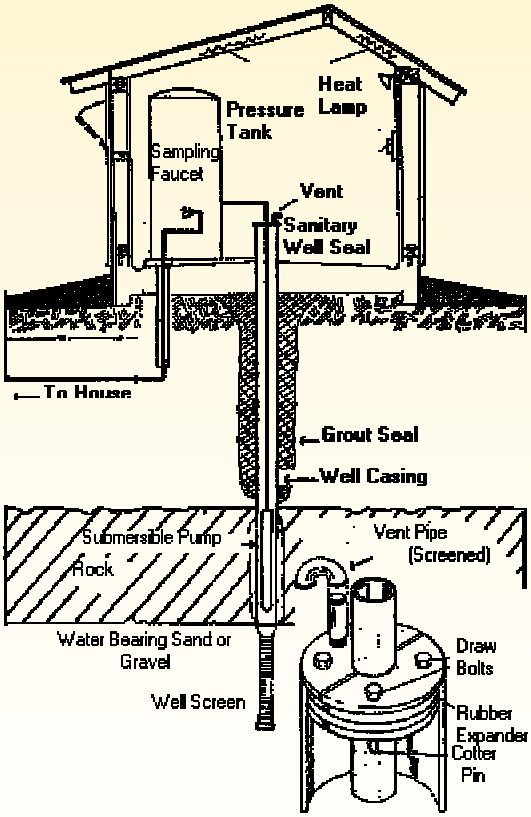

If your well is newer than 1986, you should have a Kentucky Water Well Record form for your well. Since 1986, the Kentucky Certified Water Well Driller has been required by law to provide the well owners with this record. It tells the depth of the well, diameter of the casing and static water level in the well when it was drilled, along with other well details. Subtracting the static water level from the total depth of the well gives you the feet of standing water in the well. You can use the number of feet of standing water in your well and the diameter to determine the amount of chlorine you need to disinfect your well.

Amount of Chlorine You Need to Add

You need to calculate the amount of water in your well. As long as your depth to water remains fairly stable, you can use the same numbers each time you disinfect the system. To do this you need to know the diameter of the inside of the casing and the approximate number of feet of water standing in your well.

If you know these numbers, use the chart below to determine how much chlorine you need. This chart also assumes that your plumbing system contains about 100 gallons of water and this is included in this chart. If your well is different from those in this chart, you can go to Appendix 1 and calculate the exact amount for your well and plumbing system.

Amount of household Laundry Bleach Needed to Disinfect a Well and Plumbing System

Feet of Standing Water in The Well	4-inch inside casing diameter	5-inch inside casing diameter	6-inch inside casing diameter	7-inch inside casing diameter	8-inch inside casing diameter	10-inch inside casing diameter
10 feet	1 quart + 2 1/3 cups	1 quart + 2 2/3 cups	1 quart + 2 7/8 cups	1 quart + 3 ¼ cups	1 quart + 3 5/8 cups	2 quarts + ½ cups
20 feet	1 quart + 2 ¾ cups	1 quart + 3 ¼ cups	1 quart + 3 ¾ cups	2 quarts + ½ cups	2 quarts + 1 1/8 cups	2 quarts + 1 ½ cups
30 feet	1 quart + 3 ¼ cups	2 quarts	2 quarts + 5/8 cups	2 quarts + 1 5/8 cups	2 quarts + 2 ¾ cups	3 quarts + 1 1/3 cups
40 feet	1 quart + 3 ½ cups	2 quarts + ½ cups	2 quarts + 1 ½ cups	2 quarts + 2 7/8 cups	3 quarts + ¼ cups	3 quarts + 3 ¾ cups
50 feet	2 quarts	2 quarts + 1 cup	2 quarts + 2 ½ cups	3 quarts	3 quarts + 1 7/8 cups	4 quarts + 2 ¼ cups
60 feet	2 quarts + 1/3 cups	2 quarts + 1 2/3 cups	2 quarts + 3 ¼ cups	3 quarts + 1 ¼ cups	3 quarts + 3 3/8 cups	5 quarts + 2/3 cups
70 feet	2 quarts + ¾ cups	2 quarts + 2 ¼ cups	3 quarts + 1/8 cups	3 quarts + 2 ½ cups	4 quarts + 1 cup	5 quarts + 3 1/8 cups
80 feet	2 quarts + 1 1/8 cups	2 quarts + 2 7/8 cups	3 quarts + 1 cup	3 quarts + 3 5/8 cups	4 quarts + 2 ½ cups	6 quarts + 1 5/8 cups
90 feet	2 quarts + 1 ½ cups	2 quarts + 3 ½ cups	3 quarts + 2 cups	4 quarts + 7/8 cups	5 quarts + 1/8 cups	7 quarts
100 feet	2 quarts + 2 cups	3 quarts + 1/8 cups	3 quarts + 2 7/8 cups	4 quarts + 2 cups	5 quarts + 1 5/8 cups	7 quarts + 2 ½ cups
Chlorine/10 ft. for more than 100 ft of water	*3/8 cups*	*5/8 cups*	*7/8 cups*	*1 ¼ cups*	*1 ½ cups*	*2 ½ cups*

Diagram shows approximate amounts of straight laundry bleach needed to achieve ~200-PPM chlorine in the well and plumbing system rounded to the nearest 1/8 of a cup. Chart assumes 100 gallons of water in the home pipes, pressure tank, and water heater. For wells with diameters between those shown above, use the next larger size chart (4.5-inch use 5-inch). ***Be sure to use only straight laundry bleach (5 ¼ % chlorine)*** *(usually the cheapest),* ***bleaches that have scents, fabric softeners, water conditioners, or color enhancers should never be used in a water well.*** *Double the amounts shown if treating the system for Iron and Sulfur Bacteria to achieve ~400-PPM chlorine.*

Getting Started

Let everyone in the house know that you are about to disinfect the system. Have some bottled water for drinking and cooking set aside and make sure that water-intensive needs such as watering stock, baths, showers, laundry, etc., are done before adding the chlorine to the well. An occasional toilet flush is okay, but you want the chlorinated water to sit in the system and work. **You need to bypass water treatment devices such as softeners and filters.** These devices usually have a bypass valve to redirect the water around the device. You may want to contact the manufacturer or the service technician for your treatment device to find out about its tolerance to chlorine and how to operate the bypass valve. You should also minimize the amount of chlorinated water running down the drain to your septic system since septic systems rely on bacteria to break down waste, and chlorine can kill these beneficial bacteria.

Adding the Chlorine to the Well

Pour the chlorine solution into the well, trying to make it run down the sides on the inside of the pipe. Attach a garden hose to the hose attachment closest to the well and run the hose back to the well. Re-circulate the chlorinated water down the well, rinsing the sides, piping, and wires down for a minimum of 15 minutes.

Go to every faucet in the house, starting with the ones closest to the well and let them run until you smell chlorine and then turn them off. Do this with both the hot and the cold faucets, run the washing machine and dishwasher (empty) on warm until you smell chlorine, flush each toilet until you smell chlorine, and don't forget the outside faucets and hydrants. The idea is to completely fill every pipe in the system with the highly chlorinated water. Let the system sit for a minimum of two hours with overnight being the best.

Clearing the System of Chlorine

After the chlorine has been in the system the needed amount of time, it needs to be flushed. Use an outdoor faucet to drain the excess chlorinated water from the system. When highly chlorinated water is exposed to air, the chlorine evaporates into the air quickly. It is best to use a hose to run this water to a driveway since high concentrations of chlorine will damage plants. High concentrations of chlorine are harmful to aquatic life so do not discharge the water to a stream or creek. A lawn sprinkler can be used to aerate and spread out the water being discharged.

After the garden hose is running clear and has no smell of chlorine, the inside faucets can be cleared. If iron and sulfur bacteria are a problem, you may find that particles of material are being discharged along with the water. These particles are dead bacteria and oxidized iron and manganese. You'll need to go to each faucet, remove the aerator and let the water run at full flow to flush this material from the lines. Be sure to run the washing machine and dishwasher empty through a cycle to flush this material from these lines also.

Note: If you are chlorinating your well and plumbing for an iron bacteria problem, you may have to repeat this procedure frequently to get the problem under control.

Have Your Water Tested

If you disinfected the system due to a positive Total Coliform Bacteria test or as a yearly system maintenance procedure, you should have the water tested for bacteria a week or two after the disinfection. If, after repeated disinfection and testing cycles, the Coliform tests are still coming back positive, your well may be exhibiting a possible direct connection to the surface. Wells that show connection to the surface should be repaired or properly abandoned and a new, deeper well should be constructed by a certified water well driller. If having the well repaired or constructing a new well is not feasible, an inline or in-well chlorinator or ultraviolet light disinfection unit should be installed to help ensure the water is safe from bacteria and viruses.

Treating the System for Iron and Sulfur Bacteria

If your well and system are being shock chlorinated for an iron and sulfur bacteria infestation, you may have to repeat the process frequently at first to get the problem under control. Extra strong chlorine solutions (400 ppm, twice the amount of chlorine from the chart) may be needed, along with as long as possible contact time to allow the chlorine to work its way back into the aquifer.

Many people have found that problem wells with red, orange or black water flowing from the tap can be cleared up with persistent and frequent shock chlorination. Continuous in-well chlorinators can be installed for extremely bad iron and sulfur bacteria problems. A large back-flushable activated carbon or redox filter unit can be used to remove the excess chlorine and insoluble particles before it is distributed to the house.

In wells with very high iron, sulfur, and slime bacteria, a well-rehabilitation specialist may be needed to use a combination of extremely strong chemicals and procedures to bring the well back. There are times when it is cheaper to have a certified driller plug the infested well and drill a new one. If a new well is drilled by a certified water well driller, the well needs to be installed in a new location to avoid tapping into the bacteria that have flourished in the aquifer surrounding your existing well. And with the new well, you should disinfect the well at least once a year to ensure your investment and water quality retains its value over the life of the well. Be sure to have the certified driller properly plug and seal your old well to eliminate a pathway for surface pollution to enter groundwater, which consequently could contaminate your new well.

A well does have a limited life but usually will provide 20 years or more of service before major rehabilitation, reconstruction or replacement is required if simple routine maintenance and routine well disinfection procedures are followed. When you have a new well drilled, extra protection, such as installing more than the minimum length of casing and grouting the casing into the drill hole, can cost more but is worth it. These precautions can help to protect your well water from infiltration of surface water, which could be a source of pathogens, and helps to ensure that your well will have a long, productive life while protecting your family's health and safety.

Methane Gas and Your Water Well

High concentrations of methane in enclosed structures may lead to an explosion. Water wells located in pump houses, well pits, basements or any enclosed structure should be properly vented as a safety precaution to prevent the buildup of methane. The following is an explanation of methane gas occurrence in wells and some suggested practices to help keep your well and your well house safe.

Naturally occurring gases, such as methane and hydrogen sulfide, may be present in some wells. These gases occur naturally in the subsurface, accumulating in voids within the rock and as dissolved gas in groundwater. Methane and hydrogen sulfide can enter a well through damaged or corroded well casing, improperly sealed well casing, uncased formations, and as dissolved gases being released from well water.

Methane and hydrogen sulfide gases, in the right mixture with air, can be highly explosive. A lower explosive limit (LEL) value defines the percentage of gas in air that can be explosive. If the concentration is below the LEL, there is not enough of the gas in the air to ignite. Once the concentration reaches the LEL, any ignition source may set off an explosion. Ignition sources include: light switches; pressure switches, pump relays; heat from light bulbs or engines; natural gas appliances such as furnaces and hot water heaters (including the pilot light); lit cigarettes and other flame or spark sources.

What is Methane?

Methane is a colorless, odorless gas and the chief constituent of natural gas. It is especially prevalent in coal beds, but occurs in non-coal rocks as well. Methane is lighter than air, and it will rise easily from the well to the surface. Methane is highly flammable, with an LEL of 5.3 percent. Because methane is colorless and odorless, it can accumulate undetected in well bores and enclosed structures to explosive levels if not properly vented.

What is Hydrogen Sulfide?

Hydrogen sulfide is a colorless gas with a strong rotten egg odor. Most hydrogen sulfide odors are associated with hydrogen sulfide that is dissolved in groundwater being released when exposed to the atmosphere. Hydrogen sulfide may also occur in the presence of methane. Hydrogen sulfide's LEL is 4.0 percent making it more flammable than methane. However, as it is more dense than air, hydrogen sulfide does not rise out of the well naturally (it must be carried or forced out), and does not pose as much of an explosion risk as methane does. Because hydrogen sulfide is corrosive to metals, it may corrode steel well casing sufficiently to allow methane to enter the well that the well driller had previously sealed out.

Recommended venting procedures for wells not enclosed in structures

For wells located outside of any structure, simply installing a vented well cap (Figure 1) provides sufficient venting prior to water entering the home. These well caps are designed to use on wells equipped with a pitless adapter (a device designed for the water pipe to exit the well below ground level).

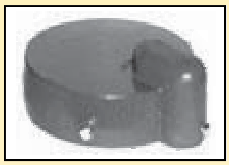

Figure 1. Vented well cap.

A sanitary seal (Figure 2) is used on wells where the water pipe exits the well through the top of the well casing. These seals consist of a rubber gasket between metal flanges. When the bolts on the metal flange are tightened, the rubber gasket seals against the well casing, electrical conduit, discharge pipe and well vent tube.

Figure 2. Sanitary seal.

The well vent tube should be inserted approximately six to twelve inches into the well below the sanitary seal (Figure 3). The well vent tube should extend above the sanitary seal to a level above any possible flood, secured in position and sealed watertight in the sanitary seal. The upper end of the well vent tube should be turned down to prevent the entry of rainwater and it should be screened with 24-mesh or smaller durable screen or filtered in such a manner as to prevent the entry of insects or small animals. The well vent tube should be large enough to allow the equalization of air pressure in the well; a minimum of one-half inch diameter is recommended.

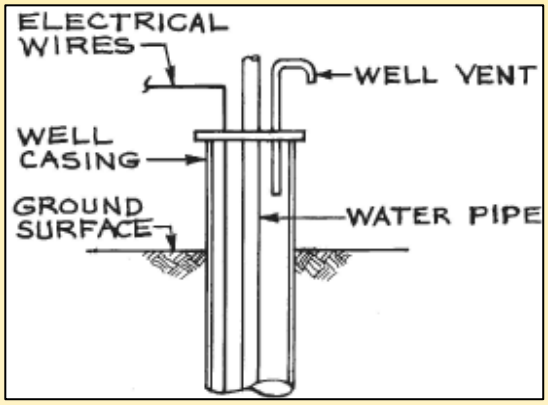

Figure 3. Recommended venting procedures for wells not enclosed in structures.

Recommended venting procedures for wells located in enclosed structures

When a well is located inside of a structure, such as a well house or even a home, the well vent tube must vent gas outside of the structure, as shown in Figure 4. A sanitary seal (Figure 2) that seals tightly against the well casing should be used. All openings through the sanitary seal should be properly sealed to prevent methane from escaping into the structure. Vented well caps (Figure 1) or well caps that do not have a gasket seal should not be used.

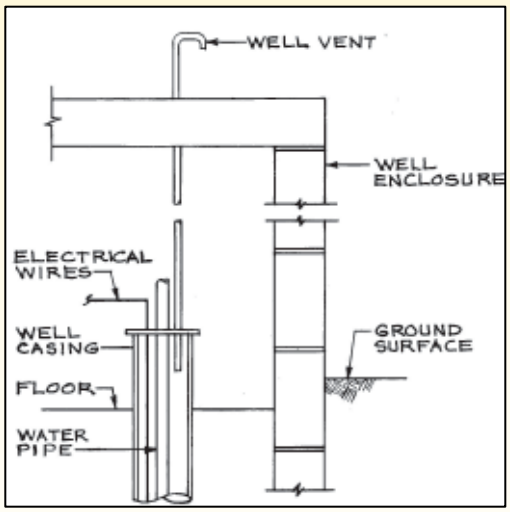

Figure 4. Recommended venting procedures for wells located in enclosed structures.

The well vent tube should extend outside of the well enclosure and terminate a minimum of 18 inches above the ground surface and above known flood elevations, as shown in Figure 4. The upper end of the well vent tube should be turned down to prevent rainwater from entering. It should be secured in position and screened with 24-mesh or smaller durable screen or filtered in such a manner as to prevent the entry of insects or small animals. The well vent tube should be large enough to allow the equalization of air pressure in the well; a minimum of one-half inch diameter is recommended. You should periodically inspect your well venting system to ensure it is functioning properly.

Additional Precautions

In addition to venting the well, you may wish to vent the structure in which the well is located in the event methane does enter the structure. There are a variety of vents available, such as roof vents, attic vents, etc. used to vent attics of houses. You may also consider a gas monitor that sounds an alarm if flammable gases are detected.

Methane and hydrogen sulfide may be dissolved in groundwater, and may not leave the well water until it arrives at the faucet, resulting in the accumulation of gas in the home. In this case, well venting alone will not remove these gases. Commercially available treatment systems are available to remove these gases before they enter a home. Most of these treatment systems involve aeration of the water which forces the gases out through a sealed vent system to the outdoors. Some modifications to the way the pump is installed can also reduce the amount of methane present in the water at the tap. A certified water well driller or a qualified pump installer may be able to make these modifications for you.

Be sure all wiring meets local electric codes and that no wires are exposed. Bare electrical wires can cause arcing and sparking, igniting gas if present. You may consider installing intrinsically safe switches and light fixtures, and intrinsically safe electric pump motors (for surface mounted pumps). Intrinsically safe electric motors, pressure switches, cutoff switches, light switches and fixtures are designed to prevent arcing and sparking. Do not store or use fuels, solvents or other pollutants in the well house or other enclosure. Fumes from these materials may accumulate in the structure and result in explosive levels. In addition, spills of these materials may lead to contamination of the well.

Water Well Construction and Inspection

Proper well construction and routine well maintenance including disinfection help ensure that your well provides a safe water supply. Well casing serves two purposes: it prevents collapse of the well boring during drilling and it helps prevent contaminants and gas from migrating into the well. Your well should have a minimum of 20 feet of casing below the ground surface. The amount of casing required will vary depending on the depth to groundwater and the type of soils and bedrock in which the well sits. The well casing should extend a minimum of four inches above ground surface and be fitted with a well cap or sanitary seal.

The space between the casing and the sides of the well bore, called the casing annulus, provides a direct conduit for surface water and pollutants to reach the water table if improperly sealed. The annulus should be sealed with drill cuttings, neat cement or bentonite. Be sure the outside of the well casing is sealed at the ground surface or floor of the structure. This prevents pollutants from seeping into the well.

Well owners should visually inspect the condition of their well casings for holes or cracks. Steel casing may be corroded by hydrogen sulfide. Examine the casing above ground as well as inside the casing using a flashlight. Push on the casing. If it moves from side to side, the well casing seal has failed and the well casing may also be damaged.

Listen for the sound of water trickling into the well when the pump is not running. Running water means the well casing may be broken or corroded. To prevent contaminants from entering through the top of the well casing, a tight-fitting, tamper-resistant, vermin-proof well cap must be installed. This will prevent the entry of insects, small animals, surface water, and pollutants. All piping and electrical connections to the well casing or well cap should have watertight seals. All holes in the well cap or seal should be used or have a watertight plug.

Well maintenance

As a well owner, you are responsible for the maintenance of your well. Protecting Your Well and Water Supply - a Groundwater Protection Plan for Domestic Well Owners, is available for download from the Division of Water's groundwater Web page, or by calling the Division of Water.

In summary:

- All wells should meet current construction standards. If a well is no longer in service, all plumbing connections should be disconnected to prevent methane from entering structures. A certified driller should be hired to properly plug unused wells to prevent groundwater contamination.

- Gasoline, motor oils, pesticides, and other pollutants should not be used or stored in the vicinity of a well or inside of a structure in which a well is located.

- You should disinfect your well annually. Well disinfection procedures are outlined in the beginning of this document.

- You should have your well water tested annually for coliform bacteria. Your local health department can provide this service, or you may consider using a private laboratory.

Certified Water Well Drillers

Kentucky law requires that only a Kentucky Certified Water Well Driller may construct, repair or plug a water well. The Directory of Certified Drillers is available on the Division of Water's groundwater Web page or by calling the Division of Water.

If you have any questions regarding your well, please contact the Division of Water or a certified water well driller in your area.

Contact Information

Division of Water Web Page:
http://www.water.ky.gov

The Division of Water's groundwater Web Page: http://www.water.ky.gov/gw/

KY Division of Water
200 Fair Oaks Lane
Frankfort, Kentucky 40601
Phone: (502) 564-3410

Appendix A

You can measure the casing inside diameter or get this from the well log if you have one. Look this number up in **Table 1** (page 19) to determine the number of gallons of water per foot of casing. The number of feet of water standing in the well can be calculated by subtracting the static water level (distance from the top of the well to the top of the water) from the total depth of the well (distance from the top of the casing to the bottom of the well). You may know these numbers already from the water well log or from when the well was drilled and can use them directly. If you do not have the well record, you can call the driller who drilled the well and ask if he has these records on the well. You can also make arrangements with a certified water well driller to make these measurements of your well for you.

Total Depth - Static Water Level = Feet of Water Standing in a Well

Feet of Water Standing in Well x Gallons of Water per Foot = Gallons of Water in Well

If you have a standard system and pressure tank, you can assume that the piping, pressure tank, and water heater have about 100 gallons of water in them. Add 100 gallons to the number of gallons of water in the well to get the number of gallons of water in the well and water system. If you have a larger than normal pressure tank, a water storage tank, or longer than normal pipe runs, you may need to make additions for their extra capacity. It will not harm your well if you over chlorinate it will just take longer to flush the chlorine from the well and system.

Use **Table 2** (page 20) to determine the amount of chlorine product needed to bring the well and water system water to approximately 200 PPM chlorine. Systems with bad iron and sulfur bacteria infestations may require 400 PPM or more to deal with the problem, so double the amount of chlorine. **Table 2** gives the amounts of various chlorine products needed per 100 gallons of water in the well and water system. The powdered and concentrated liquid products should be premixed with 5 or 10 gallons of water before being poured into the well. Pellets may be too big to fit through the vent on a sanitary seal and require you to pre-dissolve them in water. Always use a plastic or glass container or bucket when mixing concentrated chlorine solutions, since strong chlorine solutions can react with some metals.

Table 1. Well Volume

Well/Pipe Diameter (Inches)	Gallons of water for each Foot of Water Depth in a well (Gallons/Ft. of Water)	Well/Pipe Diameter (Inches)	Gallons of water for each Foot of Water Depth in a well (Gallons/Ft. of Water)
2	0.163	12	5.87
3	0.367	20	16.23
4	0.653	24	23.5
5	1.02	36	52.9
6	1.47	48	94
8	2.61	60	147

Modified from Powell, G.M., 1990, Shock Chlorination for disinfecting Water Systems, MF-911, Kansas Cooperative Extension Service

Table 2. Chlorine Mix Ratio for Shock Chlorination*

Chlorine Source	Percent Chlorine	Form*	Amount to Add *
Laundry bleach-Clorox, Purex, Hi-Lex, etc.	5 ¼	Liquid	3pt/100 gal.
Swimming pool disinfectant or concentrated chlorine bleach	12-17	Liquid	1pt/100 gal.
Dairy sanitizer	30	Powder	4oz/100 gal.
High-test calcium hypochlorite, HTH Pittchlor, Perchloron, etc.	65-75	Powder	3pt/100 gal.

*Makes approximately 200 ppm (200 mg/l) concentrations. For stronger concentration increase the amount; for weaker solution decrease the amount. Be sure that chlorine is the only active ingredient. Sometimes other materials such as algaecide are added to bleaches or pool disinfectants. Material intended for disinfection normally contains only chlorine as the active ingredient. Also look for other halogens such as iodine or bromine that may be included. These normally should be avoided since they do not evaporate as chlorine does, so they remain in the water. If used, greater care should be exercised when disposing of the treatment solution. Some laundry bleaches have scents, water conditioners, and softening agents added, these products are more expensive and should never be used to disinfect a well.

Modified from Powell, G.M.,1990, Shock Chlorination for disinfecting Water Systems, MF-911, Kansas Cooperative Extension Service

NOTES:

Printed on recycled/recyclable paper with state funds